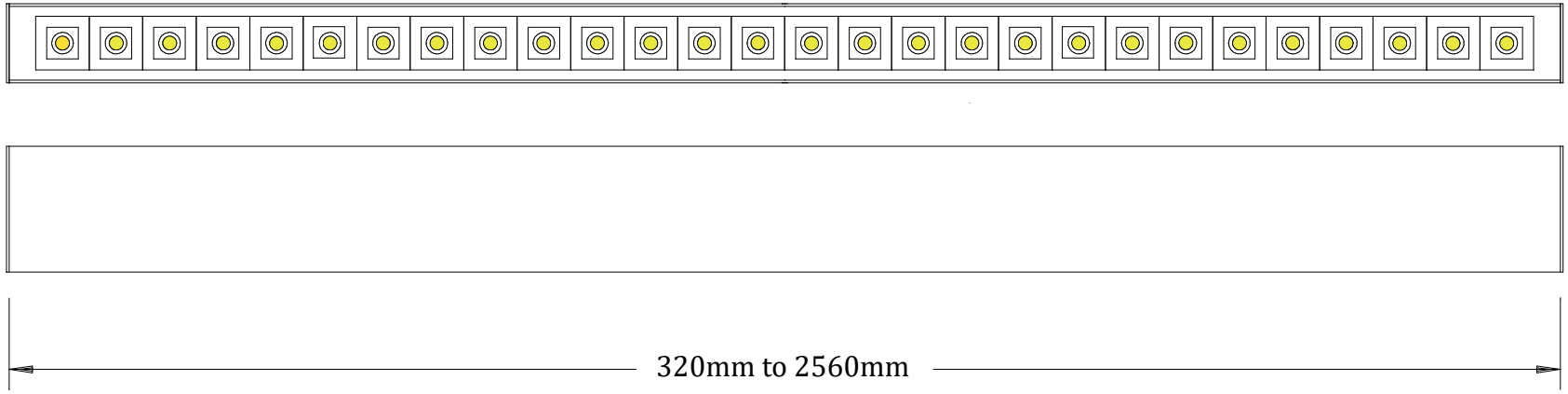
320mm to 2560mm

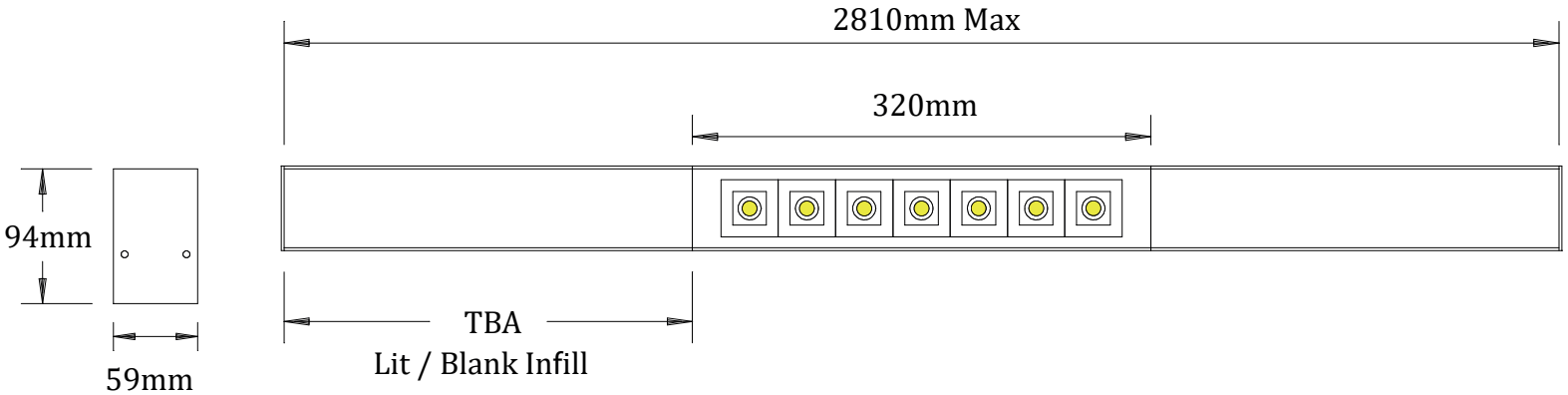
2810mm Max
320mm
94mm
59mm
TBA
Lit / Blank Infill

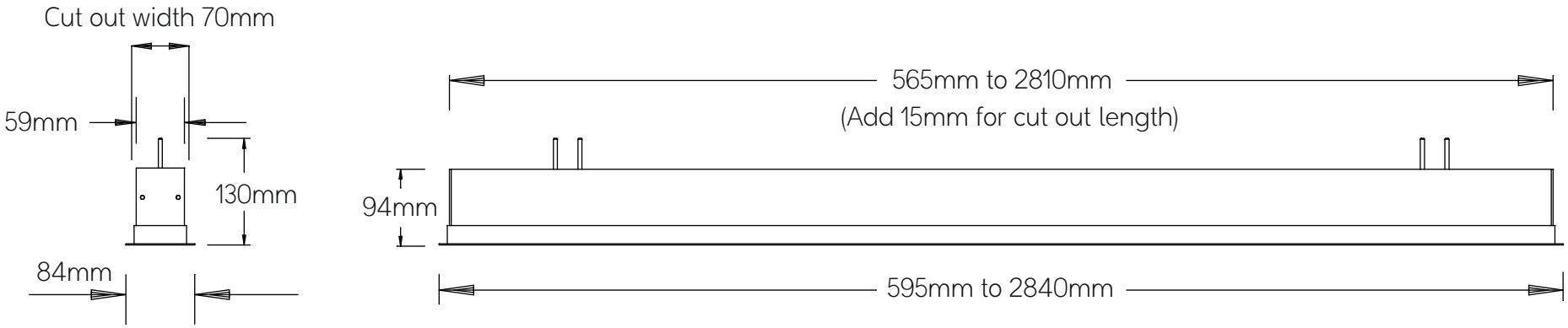
Cut out width 70mm
59mm
130mm
84mm
565mm to 2810mm
(Add 15mm for cut out length)
94mm
595mm to 2840mm